POST INSULATOR - CONDUCTOR
SINGLE CONDUCTOR - 76 / 127 mm PCD

Issue No. Issue Dt. Doc. Rev. No. Doc. Rev. Dt.	3 02.01.15 0 -	**EEI-1260**
MATERIAL OF BUS SUPPORT - ALUMINIUM ALLOY GRADE 4600 CONFORMING IS 617-1994 (LM-6). MATERIAL OF NUT, BOLT, PLAIN WASHER - MILD STEEL HOT DIP GALVANISED. SPRING WASHER. SPRING STEEL ELECTRO GALVANISED.		
BUS SUPPORT SUITABLE FOR ≤ 145 kV		

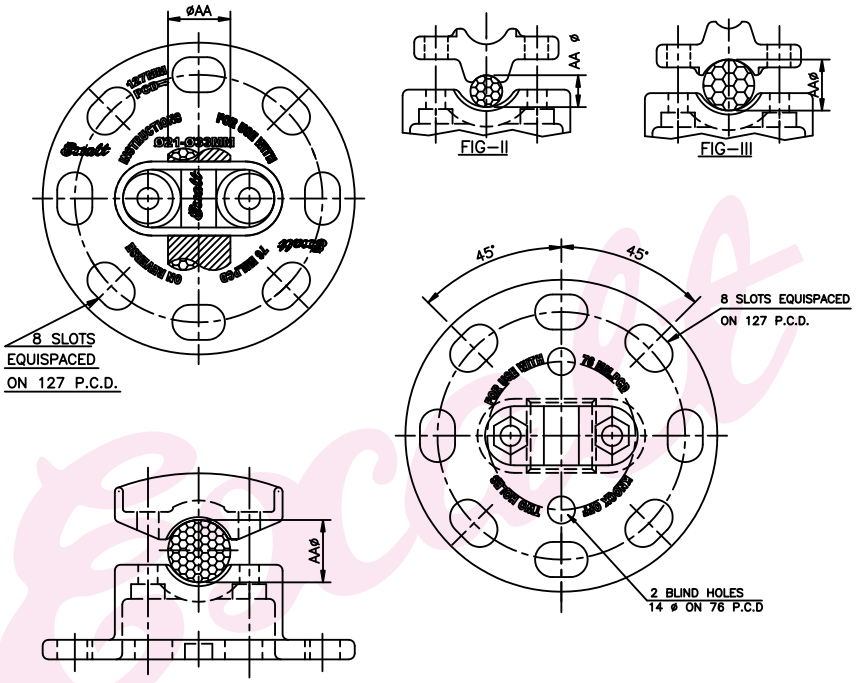

EEI-1260_05	127.0mm
EEI-1260_03	76.0mm
ITEM CODE	**PCD**

EEI-1260B	18.13-21.00	III
	10.00-16.52	II
EEI-1260A	32.00-37.00	I
EEI-1260	21.00-32.00	
ITEM CODE	**CONDUCTOR AA Ø**	**FIG.**

B-30/31, Nand Bhuvan Industrial Estate, Mahakali Caves Road, Andheri (E), Mumbai 400 093. INDIA.
Phone : 91-22-2821 3764, 2831 3764 Fax : 91-22-2835 2795
E-mail : exalt@vsnl.com, sales@exalt.co.in • web site : www.exalt.co.in