ALUMINIUM ANGLE TEE
TUBING MAIN TO TUBING TAP

Issue No. Issue Dt. Doc. Rev. No. Doc. Rev. Dt.	3 02.01.15 0 -	**EATT-10**

MATERIAL OF ANGLE TEE - ALUMINIUM ALLOY GRADE 4600 CONFORMING IS 617-1994 (LM-6). MATERIAL OF NUT, BOLT PLAIN WASHER - MILD STEEL HOT DIP GALVANISED. SPRING WASHER SPRING STEEL ELECTRO GALVANISED.

ANGLE TEE SUITABLE FOR ≤ 145 KV

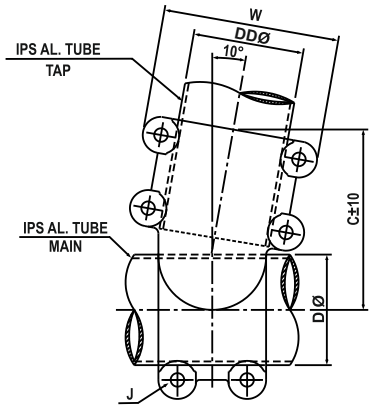

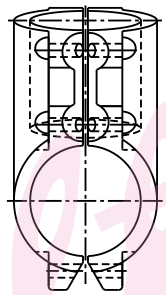

END VIEW WITHOUT TUBES

CATALOG NO.	ALUMINIUM TUBE SIZE	DIA.	ALUMINIUM TUBE SIZE	DIA.	DIMENSIONS-mm.		
	IPS	D Ø	IPS	DDØ	C	W	J
EATT-10_2	1.00"	33.40	0.75"	26.67	86	74	10
EATT-10_4	1.00"	33.40	1.00"	33.40	102	84	10
EATT-10_6	1.25"	42.16	1.00"	33.40	107	84	10
EATT-10_8	1.25"	42.16	1.25"	42.16	107	84	10
EATT-10_10	1.50"	48.26	1.00"	33.40	110	84	10
EATT-10_12	1.50"	48.26	1.25"	42.16	110	84	10
EATT-10_14	1.50"	48.26	1.50"	48.26	111	94	10
EATT-10_16	2.00"	60.30	1.00"	33.40	116	84	10
EATT-10_18	2.00"	60.30	1.25"	42.16	116	84	10
EATT-10_20	2.00"	60.30	1.50"	48.26	117	94	10
EATT-10_22	2.00"	60.30	2.00"	60.30	118	116	10
EATT-10_24	2.50"	73.03	1.00"	33.40	122	84	10
EATT-10_26	2.50"	73.03	1.25"	42.16	122	84	10
EATT-10_28	2.50"	73.03	1.50"	48.26	123	94	10
EATT-10_30	2.50"	73.03	2.00"	60.30	125	116	10
EATT-10_32	2.50"	73.03	2.50"	73.03	138	128	10
EATT-10_34	3.00"	88.90	1.00"	33.40	130	84	10

B-30/31, Nand Bhuvan Industrial Estate, Mahakali Caves Road, Andheri (E), Mumbai 400 093. INDIA.
Phone : 91-22-2821 3764, 2831 3764 Fax : 91-22-2835 2795
E-mail : exalt@vsnl.com, sales@exalt.co.in • web site : www.exalt.co.in

ALUMINIUM ANGLE TEE
TUBING MAIN TO TUBING TAP

Issue No. Issue Dt. Doc. Rev. No. Doc. Rev. Dt.	3 02.01.15 0 -	**EATT-10**

CATALOG NO.	ALUMINIUM TUBE SIZE	DIA.	ALUMINIUM TUBE SIZE	DIA.	DIMENSIONS-mm.		
	IPS	D Ø	IPS	DDØ	C	W	J
EATT-10_36	3.00"	88.90	1.25"	42.16	130	84	10
EATT-10_38	3.00"	88.90	1.50"	48.26	131	94	10
EATT-10_40	3.00"	88.90	2.00"	60.30	133	116	10
EATT-10_42	3.00"	88.90	2.50"	73.03	146	128	10
EATT-10_44	3.00"	88.90	3.00"	88.90	147	142	10
EATT-10_46	3.50"	101.60	1.00"	33.40	136	84	12
EATT-10_48	3.50"	101.60	1.25"	42.16	136	84	12
EATT-10_50	3.50”	101.60	1.50"	48.26	137	94	12
EATT-10_52	3.50"	101.60	2.00"	60.30	139	116	12
EATT-10_54	3.50"	101.60	2.50"	73.03	152	128	12
EATT-10_56	3.50"	101.60	3.00"	88.90	153	142	12
EATT-10_58	3.50"	101.60	3.50"	101.60	167	154	12
EATT-10_60	4.00"	114.30	1.00"	33.40	143	84	12
EATT-10_62	4.00"	114.30	1.25"	42.16	143	84	12
EATT-10_64	4.00"	114.30	1.50"	48.26	144	94	12
EATT-10_66	4.00"	114.30	2.00"	60.30	145	116	12
EATT-10_68	4.00"	114.30	2.50"	73.03	158	128	12
EATT-10_70	4.00"	114.30	3.00"	88.90	159	142	12
EATT-10_72	4.00"	114.30	3.50"	101.60	173	154	12
EATT-10_74	4.00"	114.30	4.00"	114.30	174	168	12
EATT-10_76	4.50"	127.00	1.00"	33.40	149	84	12
EATT-10_78	4.50"	127.00	1.25"	42.16	149	84	12
EATT-10_80	4.50"	127.00	1.50"	48.26	150	94	12
EATT-10_82	4.50"	127.00	2.00"	60.30	152	116	12
EATT-10_84	4.50"	127.00	2.50"	73.03	165	128	12
EATT-10_86	4.50"	127.00	3.00"	88.90	166	142	12
EATT-10_88	4.50"	127.00	3.50"	101.60	180	154	12
EATT-10_90	4.50"	127.00	4.00"	114.30	181	168	12
EATT-10_92	4.50"	127.00	4.50"	127.00	207	180	12
EATT-10_94	5.00"	141.30	1.00"	33.40	156	84	12
EATT-10_96	5.00"	141.30	1.25"	42.16	156	84	12
EATT-10_98	5.00"	141.30	1.50"	48.26	157	94	12
EATT-10_100	5.00"	141.30	2.00"	60.30	159	116	12

B-30/31, Nand Bhuvan Industrial Estate, Mahakali Caves Road, Andheri (E), Mumbai 400 093. INDIA.
Phone : 91-22-2821 3764, 2831 3764 Fax : 91-22-2835 2795
E-mail : exalt@vsnl.com, sales@exalt.co.in • web site : www.exalt.co.in

ALUMINIUM ANGLE TEE
TUBING MAIN TO TUBING TAP

Issue No. Issue Dt. Doc. Rev. No. Doc. Rev. Dt.	3 02.01.15 0 -	**EATT-10**

CATALOG NO.	ALUMINIUM TUBE SIZE	DIA.	ALUMINIUM TUBE SIZE	DIA.	DIMENSIONS-mm.		
	IPS	D Ø	IPS	DDØ	C	W	J
EATT-10_102	5.00"	141.30	2.50"	73.03	172	128	12
EATT-10_104	5.00"	141.30	3.00"	88.90	173	142	12
EATT-10_106	5.00"	141.30	3.50"	101.60	187	154	12
EATT-10_108	5.00"	141.30	4.00"	114.30	188	168	12
EATT-10_110	5.00"	141.30	4.50"	127.00	214	180	12
EATT-10_112	5.00"	141.30	5.00"	141.30	238	194	12

NOTE :

1) FOR NOMINAL TUBE SIZE > 38mm. O.D.,40mm. O.D., 50mm. O.D.,60mm. O.D., 80 mm. O.D., 100mm. O.D., 120mm.O.D. PLEASE ADD SUITABLE SUFFIX TO CATALOG TYPE FOR e.g. CATALOG NO. OF ANGLE TEE CONNECTOR.SUITABLE FOR 80mm. O.D.ALUMINIUM TUBE ON MAIN AND 60mm. ON TAP IS EATT-10_MM80_MM60

2) PLEASE ADD SUFFIX SS FOR CLAMPS WITH STAINLESS STEEL NUT BOLTS for e.g. CATALOG NO.OF ANGLE TEE CONNECTOR.SUITABLE FOR 80mm. O.D.ALUMINIUM TUBE ON MAIN & 60mm. ON TAP IS EATT-10_MM80_MM60_SS

B-30/31, Nand Bhuvan Industrial Estate, Mahakali Caves Road, Andheri (E), Mumbai 400 093. INDIA.
Phone : 91-22-2821 3764, 2831 3764 Fax : 91-22-2835 2795
E-mail : exalt@vsnl.com, sales@exalt.co.in • web site : www.exalt.co.in